Thunder
SDR Waveform Development and Test System

DataSoft

General Description

The Thunder Software Defined Radio (SDR) Waveform Development and Test System is an affordable, wide-band, high performance baseband and RF development and test platform. Thunder is a full duplex COTS solution providing signal communications systems engineers and waveform developers with a fully functional, reconfigurable radio development platform. The direct conversion architecture provides continuous RF coverage over the full operating range.

The configuration includes a full-duplex RF transceiver, a consolidated digital system with the TI OMAP 37x GPP/DSP processor + Xilinx Spartan-6 FPGA, and a wide-band RF front end module, all operating in an open source Linux-based environment and enclosed in a 1U housing.

The RF System includes a full-duplex wide-band transceiver that allows waveform and SDR developers to work much closer to the low-power real-time OMAP 37x processor for truly embedded wireless applications.

Benefits

- Reduces cost and time-to-market
- Wide RF operating range:
  30 MHz to 1600 MHz or 400 MHz to 4000 MHz
- Frequency covers a variety of wireless protocol applications– UHF, White Space, WiFi, WiMax, LTE
- Enables SDR development on OMAP platform
- OMAP platform supports development of waveforms and applications on Linux, VxWorks, or Android Operating Systems
- Includes fast-start templates, reference waveform implementation; software tool suite and support packages available
- Rugged 1U enclosure with removable cover for access to the hardware

Applications

- Commercial PHY-MAC waveform and applications development
- Cognitive and spectrally fragmented waveform development
- Networked and spectrum agile waveform development
- Whitespace and Dynamic Spectrum Access research

RF System Features

- Full-duplex (FDD, TDD) transceiver architecture with programmable signal bandwidths from 40 KHz to 40 MHz
- Frequency range options:
  30 MHz to 1600 MHz or 400 MHz to 4000 MHz
- Dual-channel ADCs, 12-bits at 100 Msps
- Dual-channel DACs, 16-bits at 100 Msps
- Direct Conversion Architecture
- Front End Module (FEM) covering each frequency option for low noise amplification and preselect filtering

Digital System Features

- Low cost baseband platform based on TI's OMAP 37x multimedia applications processor
- Advanced Superscaler ARM© Cortex™ RISC core with a C64x+ DSP core
- Xilinx Spartan-6 FPGA
- Multiple data and user interfaces
- Integrated GPS receiver with accurate 1-PPS output

Thunder HW Configuration

- DataSoft RF System for RF Transceiver/FEM
- DataSoft Digital System for GPP/DSP/FGPA

Thunder
SDR Waveform Development and Test System

DataSoft

Thunder Block Diagram

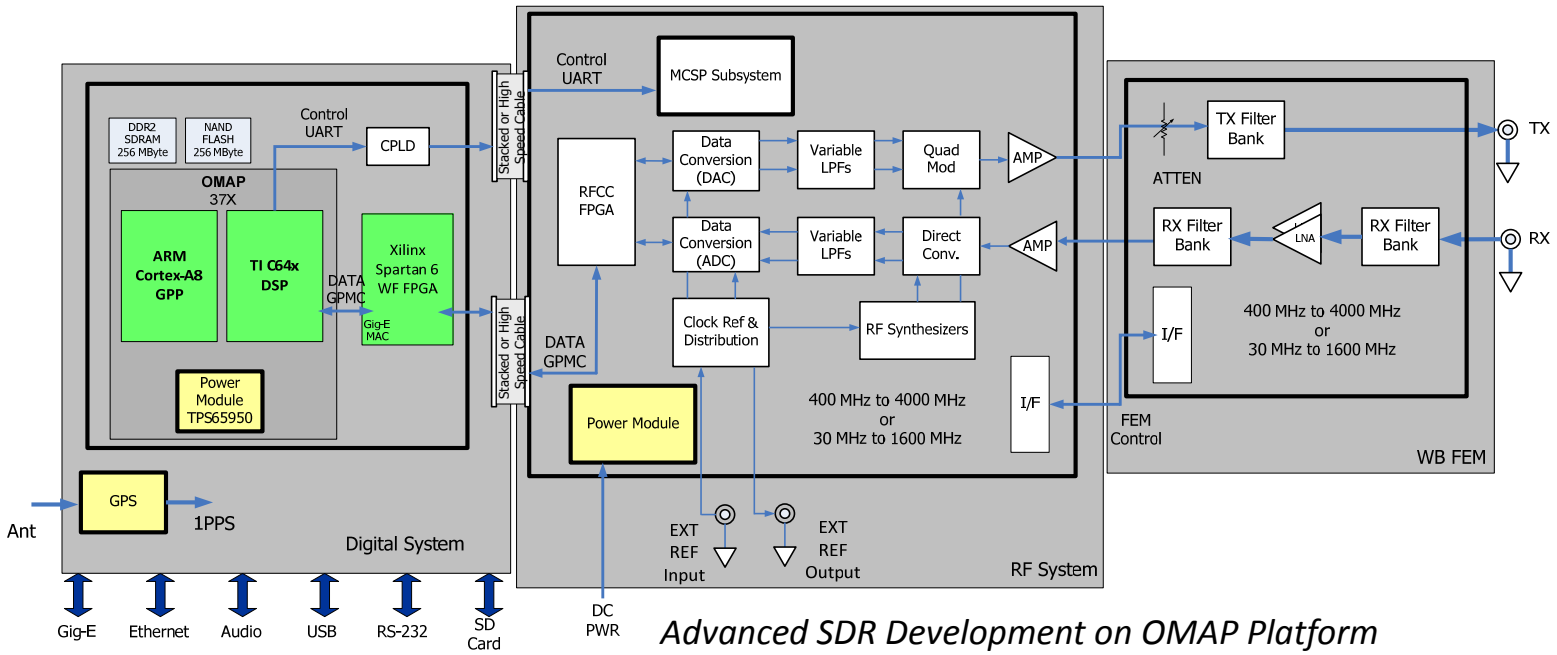

Advanced SDR Development on OMAP Platform

The TI OMAP platform supports development of waveforms and applications on Linux or Android operating systems

Integrated Software Probes .. Optional software tools for waveform debugging:

The Thunder Probe Tool-Box is a optional set of software probes specifically designed to reduce turn-around time for developing a new waveform on the Thunder platform. The probes provide a focused multi-processor debugging capability during integration.

- **Probes** provide access to critical waveform and platform traffic on multiple processors and the interaction between the processors including data capture, data inject, memory and command probes.
- Porting engineer can study real-time data flows in any connected waveform with complete ease

Useful for: Validating WF and platform data by probing points in the GPP and DSP

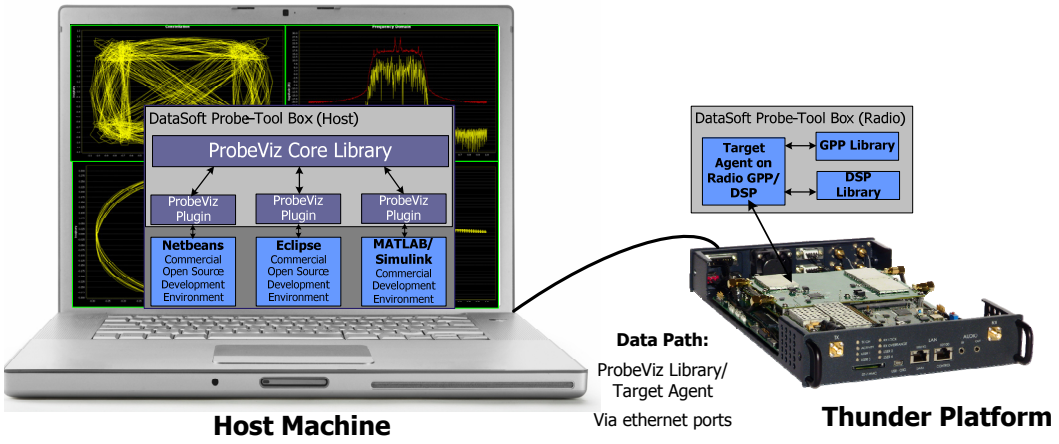

Software probes improve developer's productivity, thus reducing cost and schedule

Thunder
SDR Waveform Development and Test System

DataSoft

Thunder Processor Framework

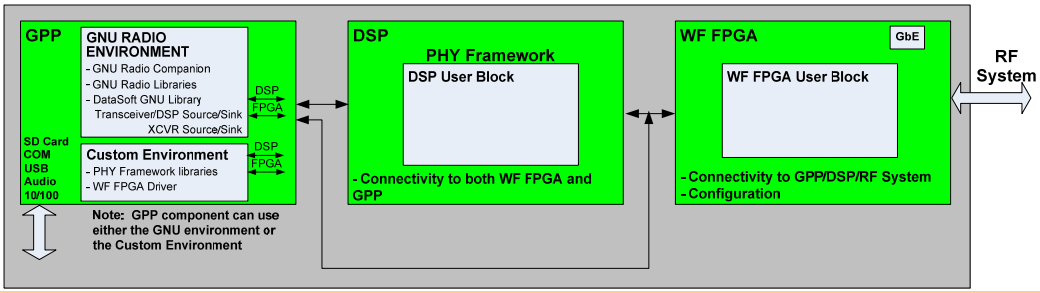

	GPP	DSP	FPGA
	DM3730 ARM Cortex-A8 1 GHz	**DM3730 C64x+ 800 MHz**	**Spartan-6 LX75 or LX150**
Target: Provided with Thunder			
Operating System	Arago Linux 2.6.32 Kernel	DSP/Bios	
Toolchain	Mentor Graphics Sourcery G++ Lite	TMS320C6000 C/C++ Code Generation Tools	LX75—Xilinx ISE WebPack (Free FPGA Development Tools) LX150—Xilinx ISE tools required
Load Mechanism	• **Boot loaders and kernel** load from SD card • **Root Filesystem** mounts from SD card or NFS	Loaded from GPP with DSP/Bios DSPLink interface	Loaded by GPP with Thunder driver
Developers Kit	• Thunder drivers for transceiver control and data communication • Sample applications to demonstrate interfaces • Thunder PSP with drivers for Ethernet, audio, UART, USB, MMC/SD interfaces • Control Panel HTTP GUI • GNU Radio FM, DQPSK demo apps with Thunder interface blocks • Probes for data and resources	• Thunder drivers for transceiver data communication • Sample applications to demonstrate interfaces • Based on DSP/BIOS and DSPLink	• ISE project with source code for WF FPGA project including dedicated User Block for custom applications • Basic FPGA framework and data path connectivity • 16 user-defined D/A converter probe points (requires DAC accessory) • Rear panel user-defined GPIOs
Additional Tools	TI DVSDK with array of ARM tools	TI DVSDK with array of DSP tools	
Host Development Environment: Provided with Thunder (or free download with instructions in documentation)			
Operating System	Ubuntu 10.04 LTS; Virtual Machine included	• Ubuntu 10.04 LTS • Windows for CCS 4.X	Windows or Linux
Connectivity	Tera Term or any terminal program		
Available Development Tools: User must purchase			
IDE	Any Linux IDE	Code Composer Studio	
Emulator/Debug	GDB	Spectrum Digital XDS510USB Plus	Xilinx Platform Cable USB II Probe
Packages	Wide range of open source software can be cross compiled for Thunder	TI and third party C64x+ components	Xilinx and third party FPGA cores

GPP, DSP, and FPGA resources are available for maximum design flexibility

Basic infrastructure and connectivity are in place for processing elements to jumpstart waveform development

Tempe, AZ, USA • 800-797-7153 x419 • www.datasoft.com • sales@datasoft.com

Thunder
SDR Waveform Development and Test System

DataSoft

Specifications

Overall

Full Duplex Symbol Rates	up to 20 Msym/s
Frequency Stability	± 2.5 ppm
Power Consumption	< 20 Watts
Operating Temperature Range	0° to +50° C
Storage Temperature Range	-40° to +85° C
Frequency Range (Th-H)	400 MHz to 4000 MHz
Frequency Range (Th-L)	30 MHz to 1600 MHz
Chassis Size	13.25” x 8” x 1.75”
Weight	< 4 lb

Transmitter

Output Impedance (nominal)	50 ohms
Output Return Loss	10 dB
Programmable Signal RF Bandwidth (Continuous)	40 KHz to 40 MHz
Max DAC Rate (16-bit)	100 Msps
Frequency Resolution	1 Hz
P1dB (FEM Dependent)	+15 dBm
Output IP3	+34 dBm
Thunder-H SSB Phase Noise: Offset from Fcenter = 1 GHz	
100 Hz	-90 dBc/Hz
1 KHz	-96 dBc/Hz
10 KHz	-105 dBc/Hz
100 KHz	-105 dBc/Hz
1 MHz	-140 dBc/Hz
10 MHz	-150 dBc/Hz
Thunder-L SSB Phase Noise: Offset from Fcenter = 400 MHz	
100 Hz	-95 dBc/Hz
1 KHz	-110 dBc/Hz
10 KHz	-121 dBc/Hz
100 KHz	-121 dBc/Hz
1 MHz	-115 dBc/Hz
10 MHz	-135 dBc/Hz
Carrier Feedthrough	-55 dBc (Th-H)
	-65 dBc (Th-L)
Sideband Suppression	-42 dBc (Th-H)
	-55 dBc (Th-L)

Receiver

Output Impedance (nominal)	50 ohms
Output Return Loss	10 dB
Programmable Signal RF Bandwidth (Continuous)	40 KHz to 40 MHz
Max ADC Rate (12-bit)	100 Msps
Noise Figure (FEM Dependent)	< 10 dB
Maximum Composite Input Power	+20 dBm
Expected Input Power	-20 dBm
Input IP3	+16 dBm
Thunder-H SSB Phase Noise: Offset from Fcenter = 1 GHz	
100 Hz	-90 dBc/Hz
1 KHz	-96 dBc/Hz
10 KHz	-105 dBc/Hz
100 KHz	-105 dBc/Hz
1 MHz	-140 dBc/Hz
10 MHz	-150 dBc/Hz
Thunder-L SSB Phase Noise: Offset from Fcenter = 400 MHz	
100 Hz	-92 dBc/Hz
1 KHz	-105 dBc/Hz
10 KHz	-115 dBc/Hz
100 KHz	-115 dBc/Hz
1 MHz	-145 dBc/Hz
10 MHz	-155 dBc/Hz
Baseband Gain	+40 dB
Sensitivity (40 KHz)	-105 dBm
Channel Selectivity 3 BW from Fcenter	-30 dBc
Channel Selectivity 5 BW from Fcenter	-50 dBc

The above specifications contain engineering estimates that are believed to be accurate and reliable.
The information is subject to change without notice.

Included Software and Documentation

- Embedded Arago Linux Kernel from TI with Device Drivers for: UART, Sound Device, SD Card and Ethernet
- Software Development Kit (SDK)
  - Source Code for: U-Boot, GNU Radio, RF Device Drivers, GNU Radio RF Blocks, SDR System Control Panel
  - Root File System containing all precompiled source code
  - STS memory, commander, data probes
- Development environment WF implementation w/ customization available
- Supported Software Loading Environments:
  - Standalone (NAND+SD Card)
  - Network (NAND+TFTP or NAND+NFS)
- Fast-start templates and example waveforms

DataSoft Corporation
1275 W. Washington St.
Suite 106
Tempe, AZ 85281
1-800-797-7153 x419
sales@datasoft.com